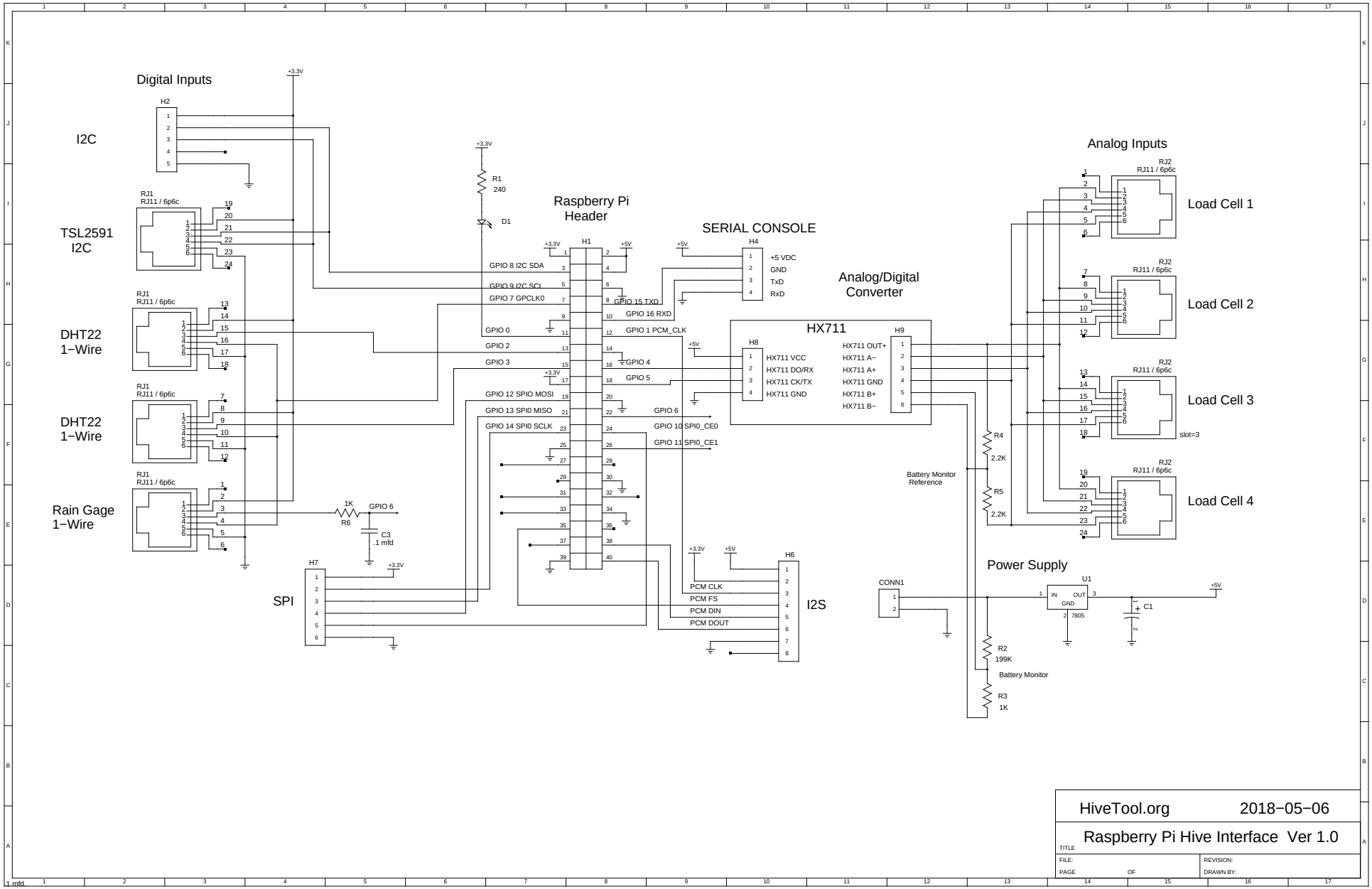

HiveTool.org 2018−05−06

Raspberry Pi Hive Interface Ver 1.0

TITLE

FILE:

PAGE OF

REVISION:

DRAWN BY: